DEGSON ELECTRONICS CO., LTD.

Product Specification

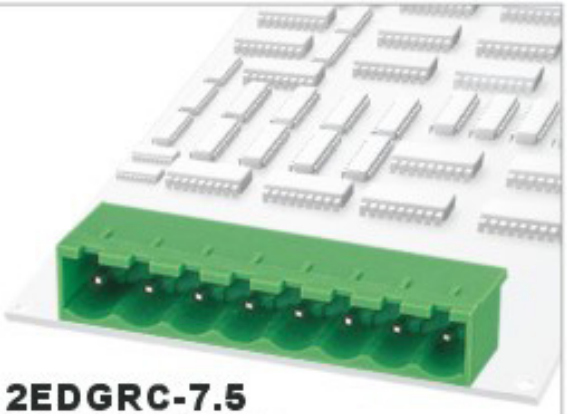

2EDGRC-5.0 2EDGRC-7.5
2EDGRC-5.08 2EDGRC-7.62

Approval		
Electrical		
Standard	UL	IEC
Rated voltage	300V	320V,400V
Rated current	15A	20A
With standing voltage	AC 2500V/1 Min	
Mechanical		
Ambient temperature	-40℃~+105℃	
Dimensions		
Pitch	5.0mm(.197")5.08mm (.200")7.5mm (.295") 7.62mm (.300")	
Poles	2P-24P	2P-12P
Material		
Housing	PA66, UL94V-0	
Pin header	Brass,Tin plated	

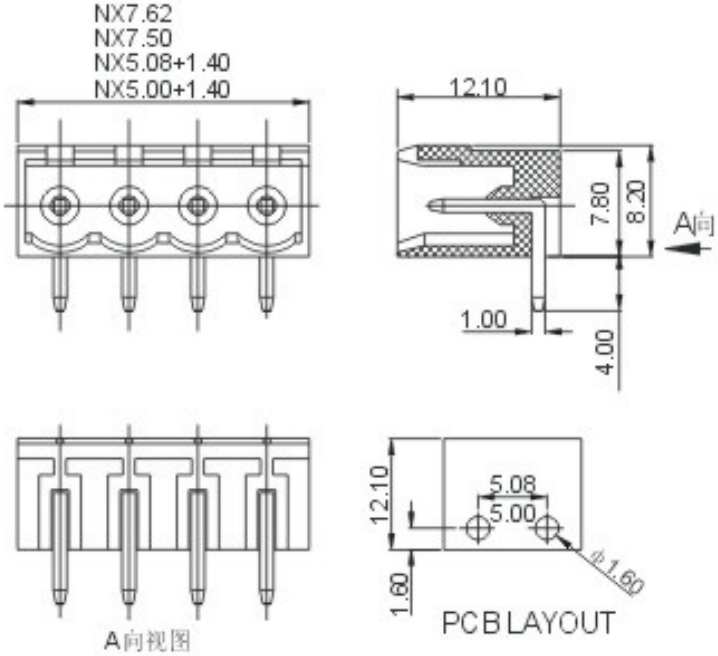

HOW TO ORDER

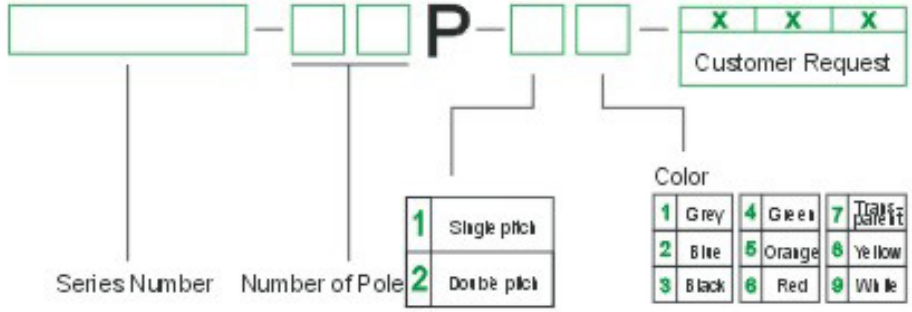

MM (INCH)	DEGSON ELECTRONICS CO., LTD.	
THIRD ANGLE PROJECTION	NAME	2EDGRC-5.0 2EDGRC-7.5 2EDGRC-5.08 2EDGRC-7.62