Modular Jacks 8 Position 8 Contact *for more options consult representative*

Dimensions in mm

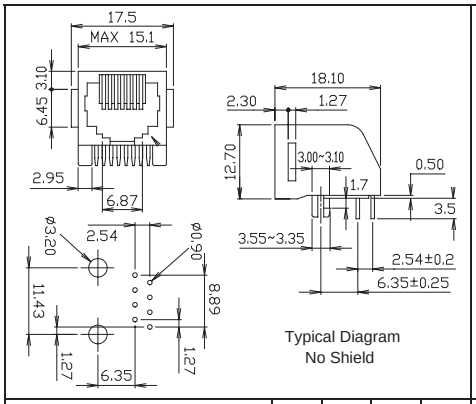

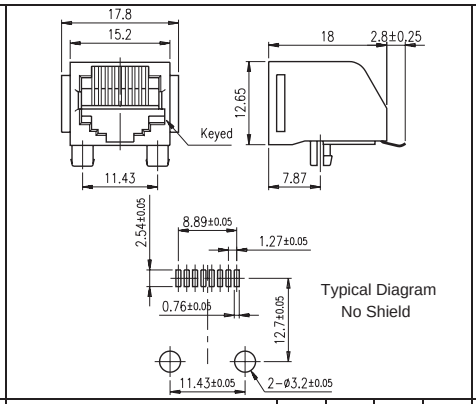

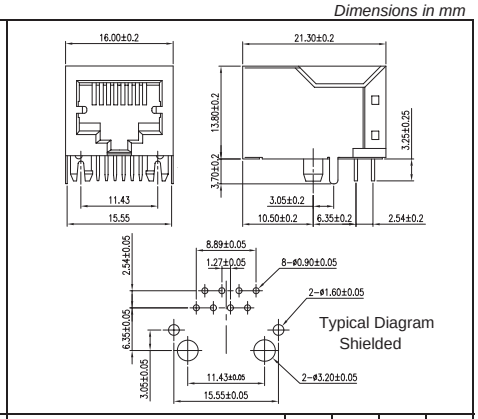

Side Entry Low Profile Split-Peg Thru-Hole Part Number: MJ	G71	Colour	Keyed	Flange	Shielded
MJ0198814	G71B00481	B		✓	
MJ0198814A	G71B00501	B	✓	✓	
MJ0688814	G71B00571	B		✓	✓
	G71B00591	B	✓	✓	✓

Side Entry Low Profile Split-Peg SMT Part Number: G71	Colour	Keyed	Flange	Shielded
G71B00511	B		✓	
G71B00551	B	✓	✓	
G71B00621	B		✓	✓
G71B00681	B	✓	✓	✓

Side Entry Low Profile Split-Peg Thru-Hole Part Number: MJ	G71	Colour	Keyed	Flange	Shielded
MJ0368814A	G71B00261	B			
MJ0368814	G71B00271	B		✓	
	G71B00311	B			✓

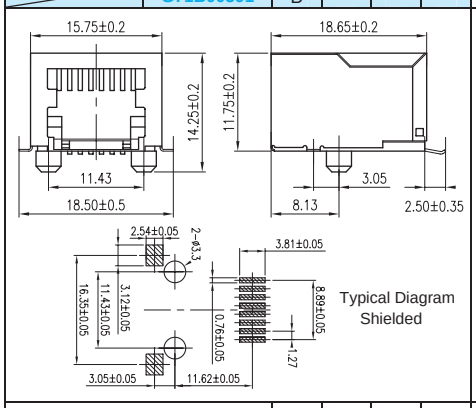

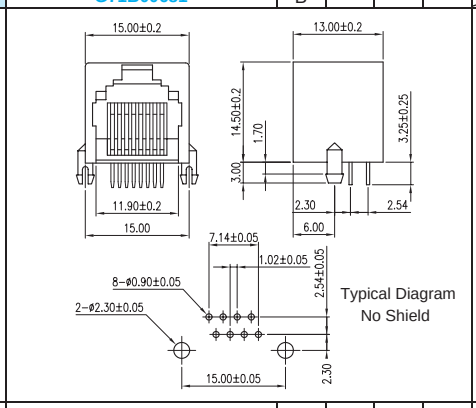

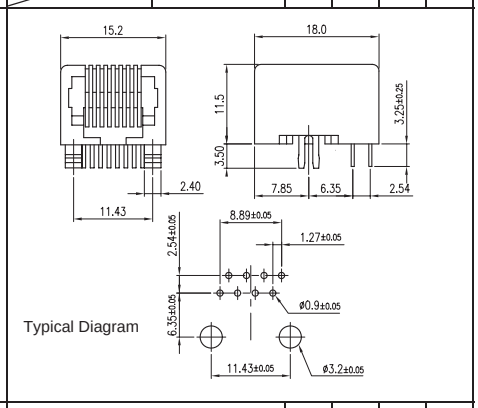

Side Entry Very Low Profile SMT Part Number: G71	Colour	Keyed	Flange	Shielded
G71B00071 (No-Peg)	B			
G71B00081 (Round-Peg)	B			✓

Side Entry Mini Low Profile Split-Peg Thru-Hole Part Number: MJ	G71	Colour	Keyed	Flange	Shielded
MJ0128814	G71B00881	B			
MJ0128814A	G71B00901	B	✓		
	G71B00961	B			✓
	G71B00981	B	✓		✓

Side Entry Very Low Profile Split-Peg Thru-Hole Part Number: G71	Colour	Keyed	Flange	Shielded
G71B00091	B			

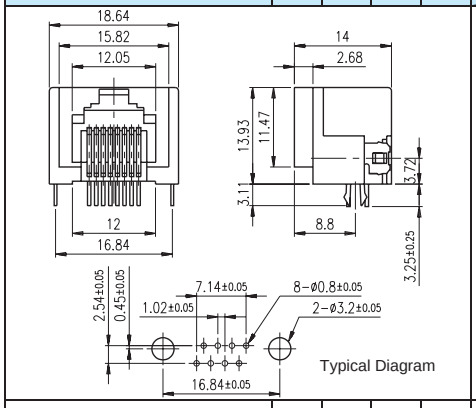

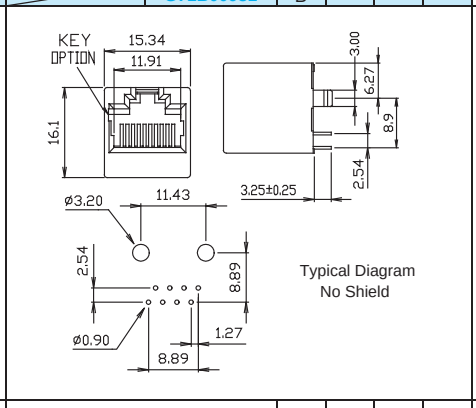

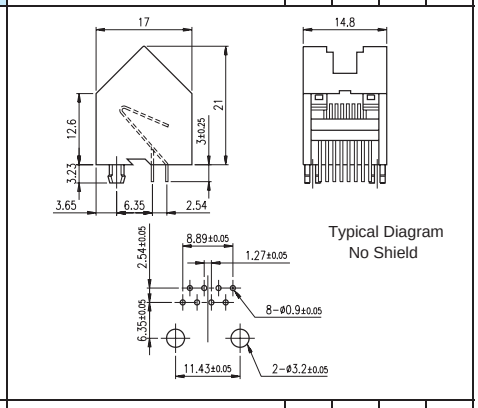

Side Entry w/Metal Pegs Thru-Hole Part Number: G71	Colour	Keyed	Flange	Shielded
G71B00781	B			
G71B00801	B	✓		

Top Entry Split-Peg Thru-Hole Part Number: MJ	G71	Colour	Keyed	Flange	Shielded
MJ0468814	G71B01301	B			
MJ0468814A	G71B01321	B	✓		
	G71B01341	B			✓
	G71B01361	B	✓		✓

Angled Entry Split-Peg Thru-Hole Part Number: G71	Colour	Keyed	Flange	Shielded
G71B01391	W			
G71B01401	W			✓

Suffix EU or LF indicates RoHS Compliant

B: Black W: White MJ: Supplied from Europe G71 Supplied from Asia