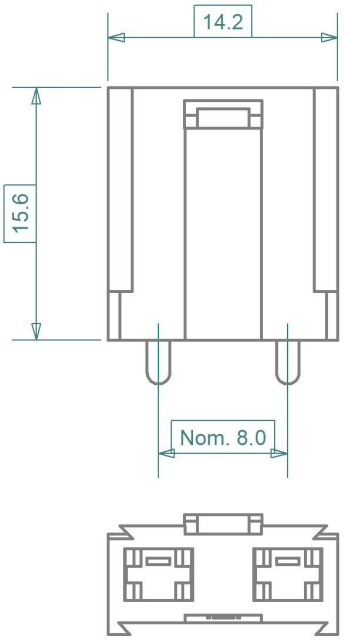

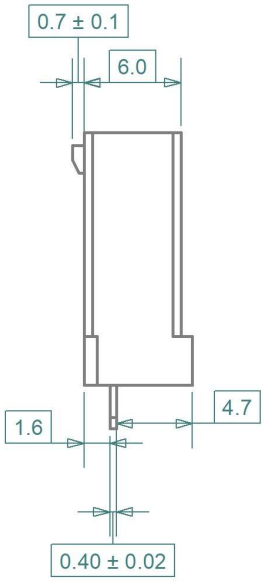

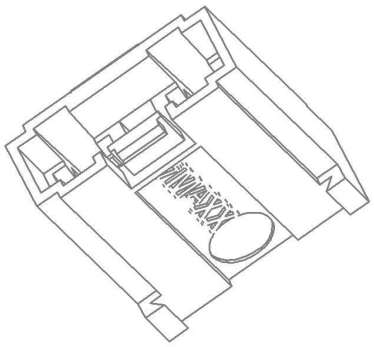

3D not to scale

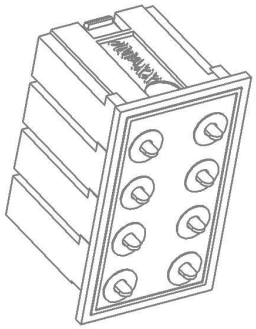

PCB layout

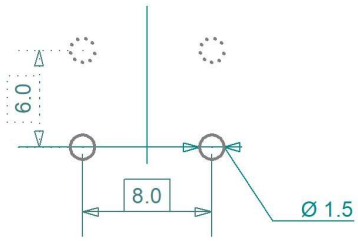

Note: Holder can be mounted in larger multiples,
PCB pin pitch is 6.0 mm

iMaXX ref.	Description	Material
H7810	PCB fuse holder assembled, 2x1 pin	
H7801	Fuse holder body, black	PET GF33 UL 94 V-0
CBX715FL	contact PCB, 1 pin, loose	KHP102, Sn plated

Revisions						
	Date	Type		Date	Appr.	
a	04/24	updated contact material & dims.	Drawn	11/11	GRH	
			Checked	04/24	AdH	
			Standards			
			Approved	04/24	BE	
			Scale 2 : 1		Title	H7810 miniOTO PCB fuse holder 1P
			Projection	Tolerance ± 0.2 mm unless otherwise noted	Drawing type	schematic
					Drawing number	H7810 drawing 1
					Sheet	1 of 1
					Layers / Sheet	0 1 2 6 8 9 11 Sheet 01