MT21x-10

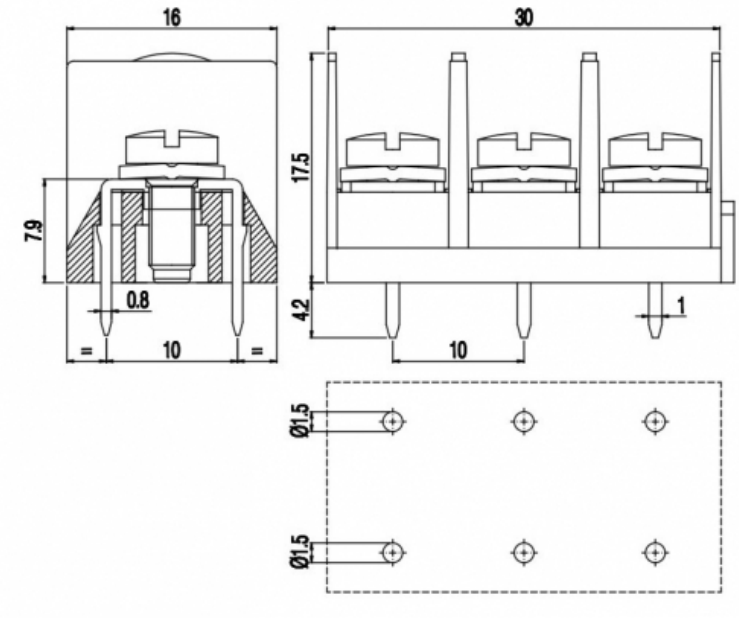

Barrier terminal block - Modular version - Pitch 10mm - 2÷3 poles

GENERAL INFORMATION

pitch:	10 mm
housing height:	17,50 mm
housing depth:	16 mm
dimensional class:	medium
wire section:	2x2.5 mm² / 2x14 AWG
clamp opening size:	
wire stripping:	max 11 mm
operating temperature:	-40°C ÷ +130°C

ELECTRICAL CHARACTERISTICS

current:	25A
voltage:	750V
test voltage:	3 kVrms/60s

MECHANICAL CHARACTERISTICS

screw:	M3.5
max. torque:	0.8 Nm / 7.2 in.lbs

APPROVALS DATA

	CSV	VDE	cULus
	EN 60998-1	EN 60998-1	UL 1059
current:	25A	25A	15A factory / 20A field
voltage:	750V	750V	600V
wire section:	2x2.5mm ^{2}	2x2.5mm ^{2}	12÷24AWG
torque:	0.8Nm	0.8Nm	7.2Lb-in
FILE:	EQ203	40019721	E178356

MATERIALS

AVAILABLE COLOURS

Copyright ©2020 - euroclamp - http://www.euroclamp.it

housing:	PA - UL 94 V0
screw:	Galvanized steel
clamp/spring:	Galvanized iron
terminal:	Tin-plated copper alloy

GN GY BK BL RD YL OG

other colours: upon request

poles	P/N	pcs/pack	W [Kg]*	W [Kg]*
2	MT212-10	N/A	N/A	N/A
3	MT213-10	N/A	N/A	N/A
..	MT21..-10	N/A	N/A	N/A

Copyright ©2020 - euroclamp - http://www.euroclamp.it