MVE15x-5-V

euroclamp

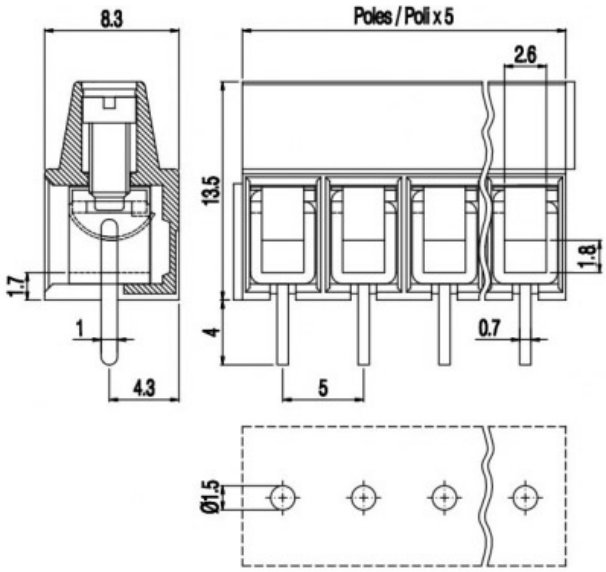

Version with antirotation pegs is available on 2 poles connections.
Disponibile per connessioni a 2 poli versioni con perni antitorsione.

Single-deck terminal block - Modular version - Pitch 5mm - 2÷12 poles

GENERAL INFORMATION	
pitch:	5 mm
housing height:	13,50 mm
housing depth:	8.3 mm
dimensional class:	slow
wire section:	1.5 mm² / 16 AWG
clamp opening size:	2.6 × 1.8 mm
wire stripping:	max 7 mm
operating temperature:	-40°C ÷ +130°C

ELECTRICAL CHARACTERISTICS	
current:	17.5A
voltage:	450V
test voltage:	2.5 kVrms/60s

MECHANICAL CHARACTERISTICS	
screw:	M2.5
max. torque:	0.4 Nm / 3.6 in.lbs

APPROVALS DATA

	CSV	VDE	cULus
	EN 60998-1	EN 60998-1	UL 1059
current:	17.5A	17.5A	17.5A factory / 10A field
voltage:	450V	450V	300V
wire section:	1.5mm ^{2}	1.5mm ^{2}	16÷30AWG
torque:	0.4Nm	0.4Nm	3.6Lb-in
FILE:	EP151	40019705	E178356

Copyright ©2020 - euroclamp - http://www.euroclamp.it

MATERIALS

housing:	PA - UL 94 V0
screw:	Galvanized steel
clamp/spring:	Tin-plated copper alloy
terminal:	Tin-plated copper alloy

AVAILABLE COLOURS

GN (STD) GY BK BL RD YL OG

other colours: upon request

poles	P/N	pcs/pack	W [Kg]*	W [Kg]*
2	MVE152-5-V	N/A	N/A	N/A
3	MVE153-5-V	N/A	N/A	N/A
4	MVE154-5-V	N/A	N/A	N/A
5	MVE155-5-V	N/A	N/A	N/A
6	MVE156-5-V	N/A	N/A	N/A
7	MVE157-5-V	N/A	N/A	N/A
8	MVE158-5-V	N/A	N/A	N/A
9	MVE159-5-V	N/A	N/A	N/A
10	MVE1510-5-V	N/A	N/A	N/A
11	MVE1511-5-V	N/A	N/A	N/A
12	MVE1512-5-V	N/A	N/A	N/A
..	MVE15..-5-V	N/A	N/A	N/A

Copyright ©2020 - euroclamp - http://www.euroclamp.it