PVxx-5-V-M

euroclamp

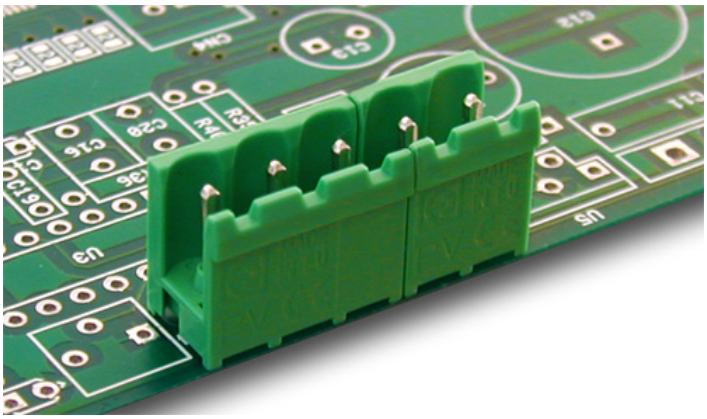

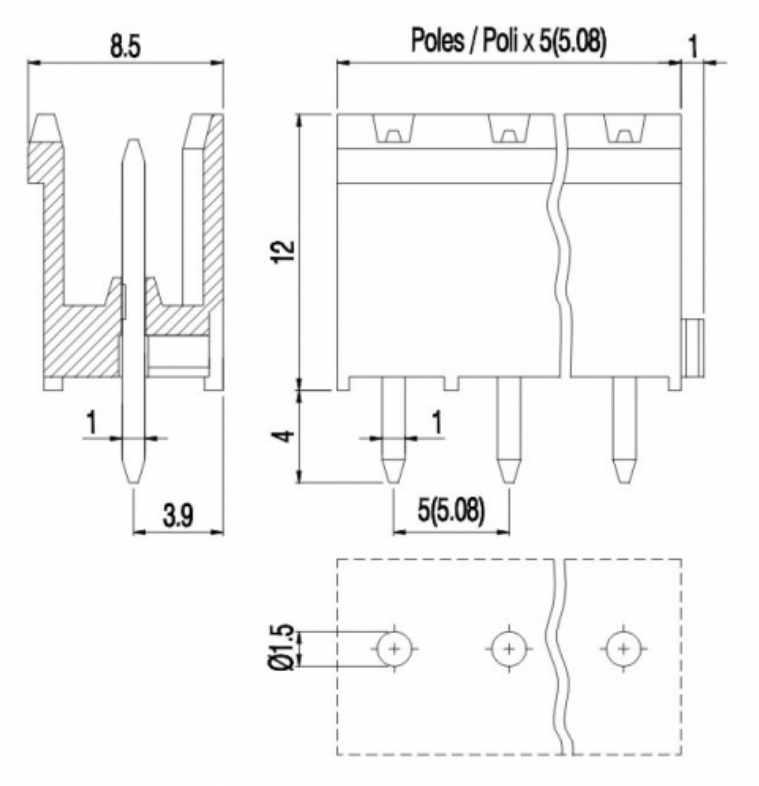

Male plug-in connector - Modular version - Pitch 5mm - 02 ÷ 03 poles

GENERAL INFORMATION	
pitch:	5 mm
housing height:	12,00 mm
housing depth:	8.5 mm
dimensional class:	medium
wire section:	-
clamp opening size:	
wire stripping:	-
operating temperature:	-40°C ÷ +130°C

ELECTRICAL CHARACTERISTICS	
current:	12A
voltage:	250V
impulse voltage:	4 kV

MECHANICAL CHARACTERISTICS	
-	-

APPROVALS DATA

	CSV	VDE	c UL us
	EN 61984	EN 61984	UL 1059
current:	12A	12A	12A factory / 12A field
voltage:	250V	250V	300V
FILE:	CA02.04178	40005779	E178356

MATERIALS	
housing:	PA - UL 94 V0
screw:	n/a

AVAILABLE COLOURS

GN GY BK BL RD YL OG

Copyright ©2020 - euroclamp - http://www.euroclamp.it

clamp/spring: n/a other colours: upon request
terminal: Tin-plated copper alloy

poles	P/N	pcs/pack	W [Kg]*	W [Kg]*
02	PV02-5-V-M	N/A	N/A	N/A
03	PV03-5-V-M	N/A	N/A	N/A

Copyright ©2020 - euroclamp - http://www.euroclamp.it