USB 2.0 Sockets Type A	PCB, angled

SPECIFICATION:

Current rating:	1.5 A
Voltage rating:	30 V
Insulation resistance:	1000 MΩ min.
Contact resistance:	30 mΩ max.
Dielectric voltage:	500 V AC
Operation temperature:	-25 °C to +80 °C

MECANICAL:

Mating force:	≤ 35 N
Unmating force:	≥ 10 N

MATERIAL:

Insulator:	PBT white UL94V-0
Shell:	Metal
Contacts:	Brass

FINISH:

Shell:	Nickel plated
Contacts:	Gold Flash in contact area
	Tin plated on solder tails

HANDLING:

Processing:	Wave soldering
Packing:	Tray

TOLERANCE:

.X	± 0.30
.XX	± 0.25

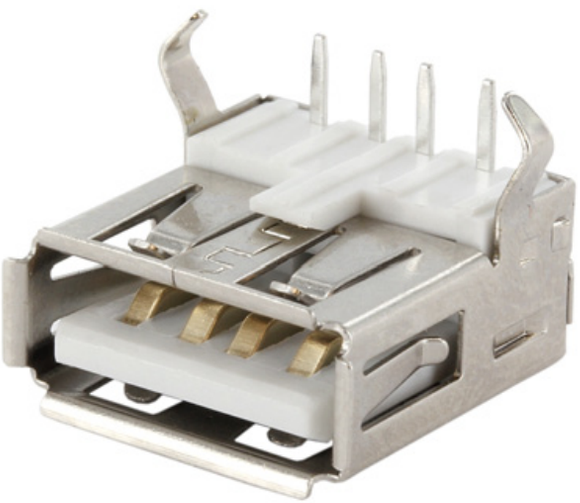

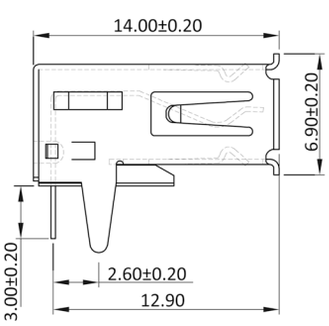

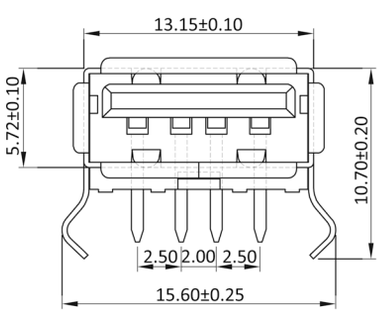

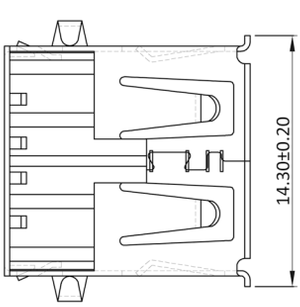

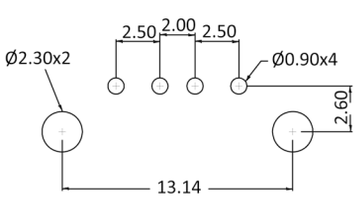

Recommended PCB Layout